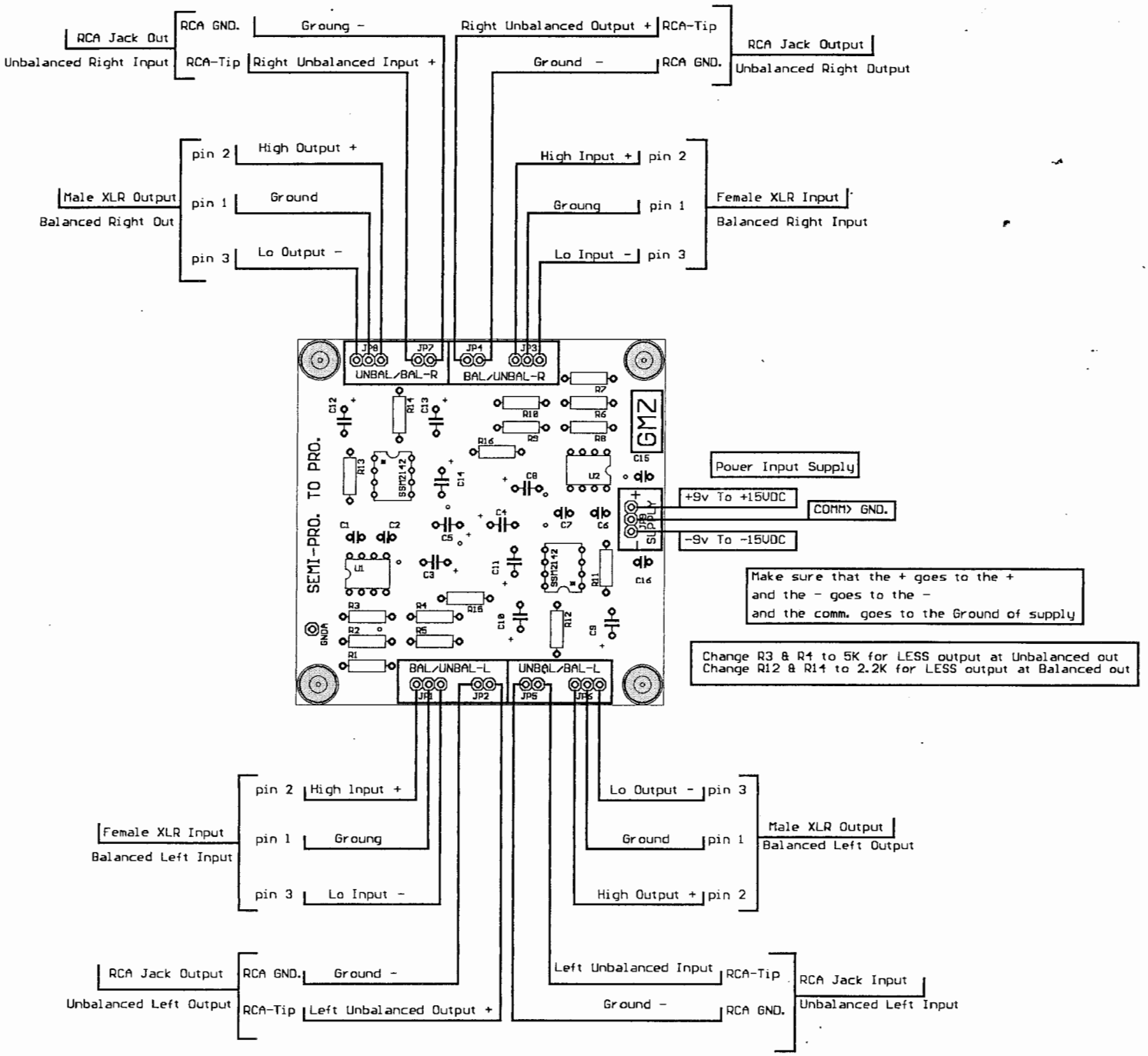

9/21/1998 07:26:04p f=0.826 C:\Program Files\EAGLE\Board hook ups\semi pro to pro.brd

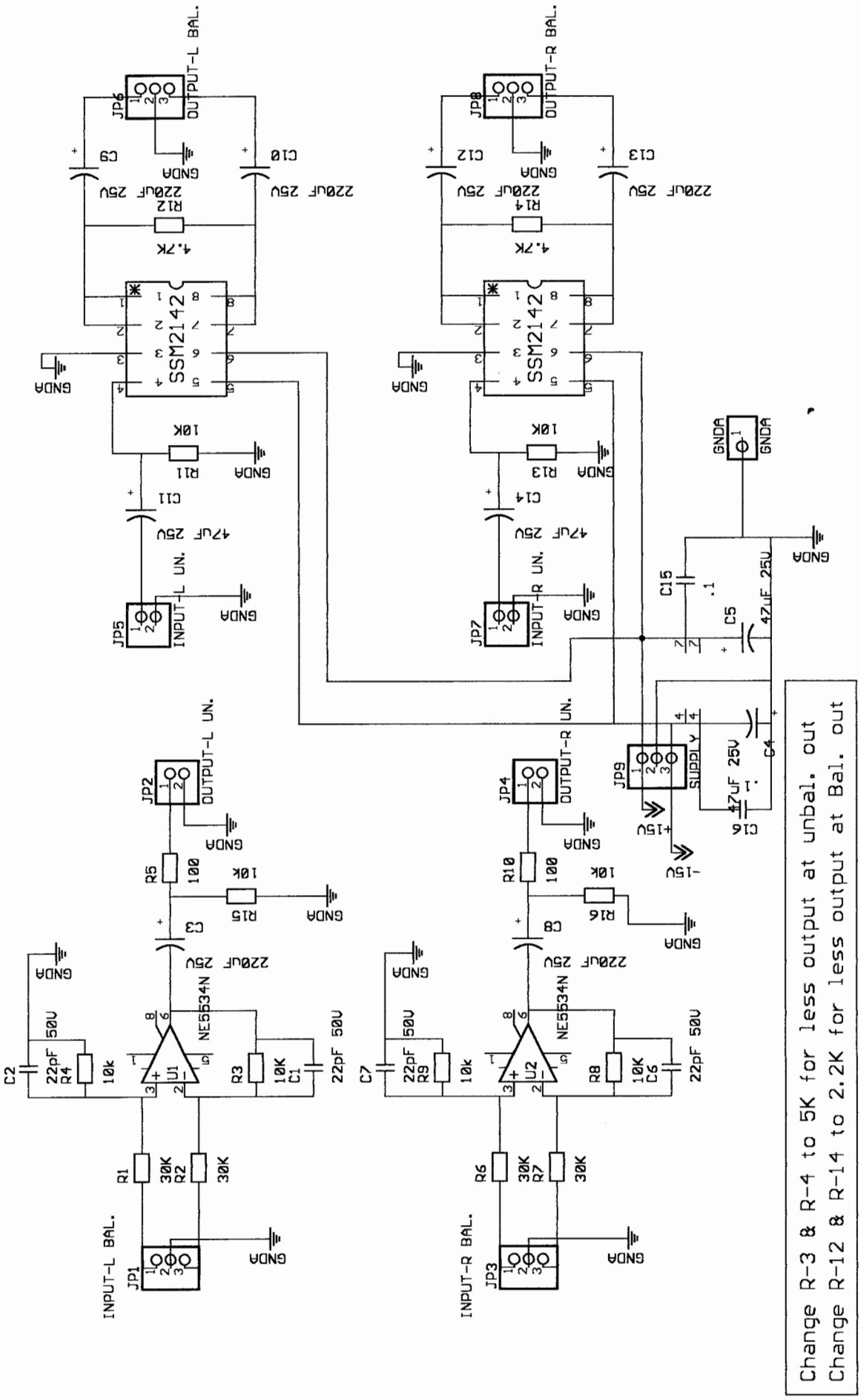

9/01/1998 09:03:18a D:\EAGLE\EAGLE\PRO TO SEMY PRO.sch (Sheet: 1/1)